LDC
Loading Dock Company

Series D550 Air Frame Inflatable Truck Shelter

Benefits

- SAVE hundreds of dollars in reduced energy costs
- IMPROVE working conditions by keeping dust, dirt, debris & insects out
- PROTECT product & personnel from harsh weather conditions
- INCREASE PRODUCTIVITY by providing a safe & comfortable working environment
- DURABLE range of Hi-Performance fabrics to choose from
- CUSTOM sizes available

Specifications

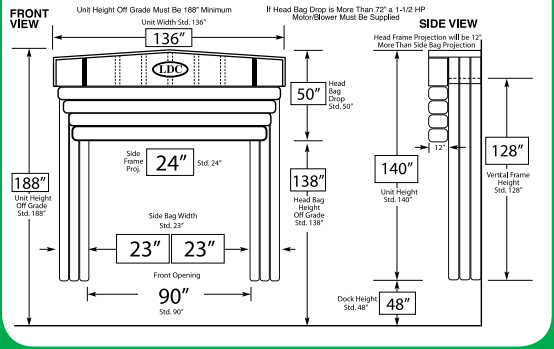

Generally designed to suit 10' wide x 10' high openings. The series D550 service a large variety of trailer heights. This unit allows full access to the rear of the trailer when loading and unloading. An internal oil tempered spring on the header air bag and counter weight retraction design on the vertical bags allows the top and side air bags to fully retract when not in use. This design prevents damage from incoming trailers since the unit is inflated after the trailer has docked and deflated before trailer departs.

LDC offers a wide variety of custom inflatables to satisfy your dock requirements

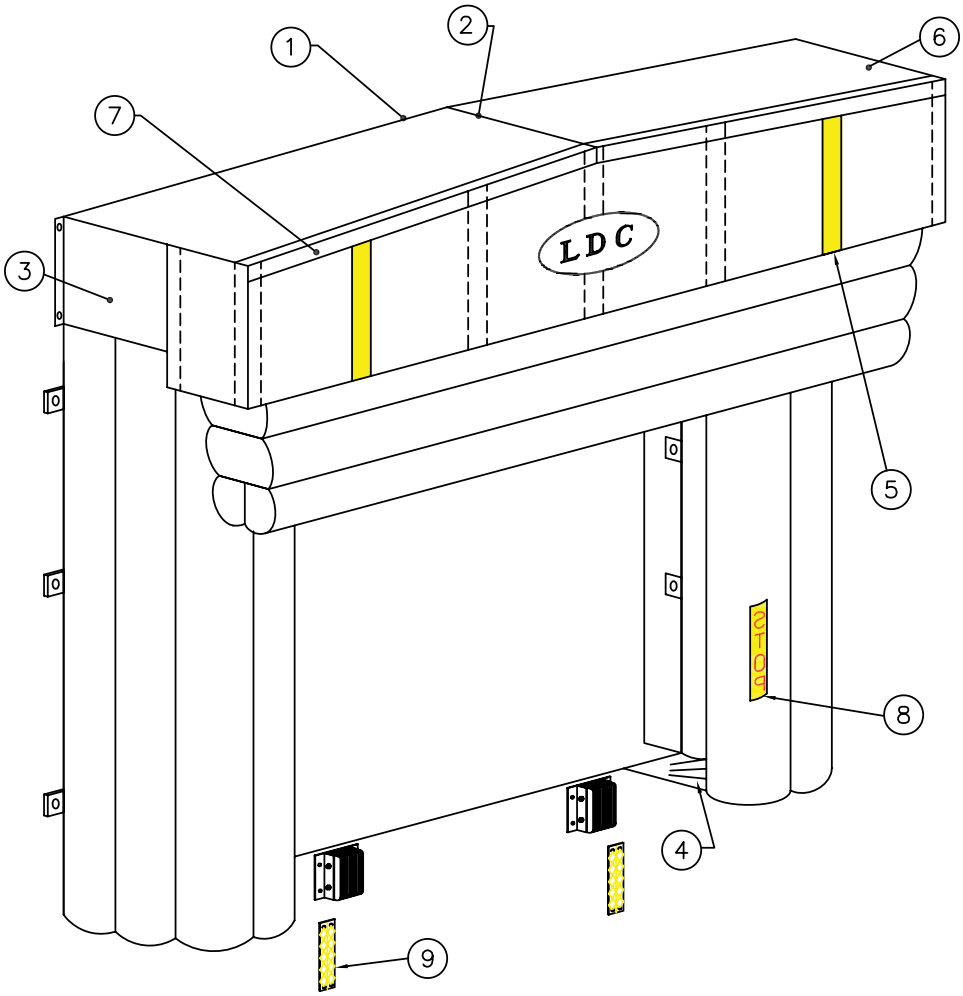

1 Pressure treated framing resists rot (optional galvanized frame available)

2 Raked head frame diverts water to sides

3 Galvanized side supports support head frame

4 Replaceable draft flap seals bottom gap between truck and building wall

5 Yellow guide stripe ensures accurate placement of trucks

6 Translucent polyethylene sheeting with UV inhibitors allows light into loading dock area

7 Galvanized trim angle will not rust

8 "Stop" logo on side air bag to prevent trailer from entering dock area if bag is accidentally left inflated

9 Optional "Reflective Guides" ensure accurate truck placement to help maximize efficiency of unit

Customize Your Dock to Suit Your Specific Needs

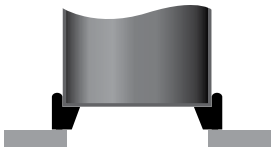

(Top View)

Conventional foam pads protect against weather, but restricts access to the trailer opening.

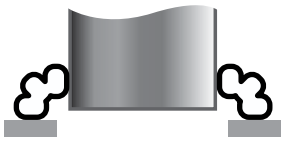

(Top View)

LDC's D550 inflatable provides full access to the rear of the trailer.

LDC can customize your dock seal with the ideal fabric for your application from a wide range of colours and fabrics available.

14 oz Hi-Tear Vinyl	
22 oz Hi-Tear Vinyl	
32 oz Hi-Tear Vinyl	
40 oz Hi-Tear Vinyl	
Hi-Performance Arctic Seal (NEW)	
16 oz Hi-Tear Hypalon	
40 oz Hi-Performance Hypalon	

AUTHORIZED DEALER

LOADING DOCK COMPANY (LDC) LTD.
1090 Aerowood Dr., Units 2-4
Mississauga, ON L4W 1Y5
Phone 905.566.0157 Fax 905.566.8003
Toll Free **866.864.5265**
www.loadingdockcompany.com

LDC Loading Dock Company